Prestolite Leece·Neville

Technical Service
Parts Breakdown

Group:	AVi168W	Notes:
Form:	SP-AVi168W family	
Date:	January, 2020	
File:	Alternator Parts List Section	

Component View	Rotor Assy	Stator Assy	Front housing Kit	Rear Housing Kit	Rectifier Kit	Regulator Kit
PN°	1	2	3	4	5	6
AVi168W	P00026	P00027	P00120	P00121	P00122	P00123
AVi168W3170	P00125	P00027	P00120	P00121	P00122	P00123
AVi168W3171	P00125	P00027	P00120	P00121	P00122	P00123

Important: The information contained in this bulletin is intended for use by trained, professional technicians who have the proper tools, equipment, and training to perform the required maintenance described above. This information is NOT intended for 'do-it-yourselfers', and you should not assume that this information applies to your equipment. If you have any questions regarding this information please visit our website at www.prestolite.com, or contact our technical service department at:

Leece-Neville Heavy Duty Systems
7585 Empire Drive
Florence, KY 41042

Phone/Fax: (866) 288-9853
webmail@prestolite.com

Prestolite Leece·Neville

Technical Service
Parts Breakdown

Group:	AVi168W	Notes:
Form:	SP-AVi168W family	
Date:	January, 2020	
File:	Alternator Parts List Section	

Component View	Cover	Hardware Kit	Slip Ring Cover Kit			
PN°	7	8	9			
AVi168W	P00116	P00124	P00128			
AVi168W3170	P00116	P00124	P00128			
AVi168W3171	P00116	P00124	P00128			

Important: The information contained in this bulletin is intended for use by trained, professional technicians who have the proper tools, equipment, and training to perform the required maintenance described above. This information is NOT intended for 'do-it-yourselfers', and you should not assume that this information applies to your equipment. If you have any questions regarding this information please visit our website at www.prestolite.com, or contact our technical service department at:

Leece-Neville Heavy Duty Systems
7585 Empire Drive
Florence, KY 41042

Phone/Fax: (866) 288-9853
webmail@prestolite.com

Prestolite Leece-Neville

Technical Service Bulletin

Source: Leece-Neville Heavy Duty Systems Division - Arcade, NY USA

Date: January, 2020

Bulletin No:

Models: AVi168W

Subject: Hardware service kit

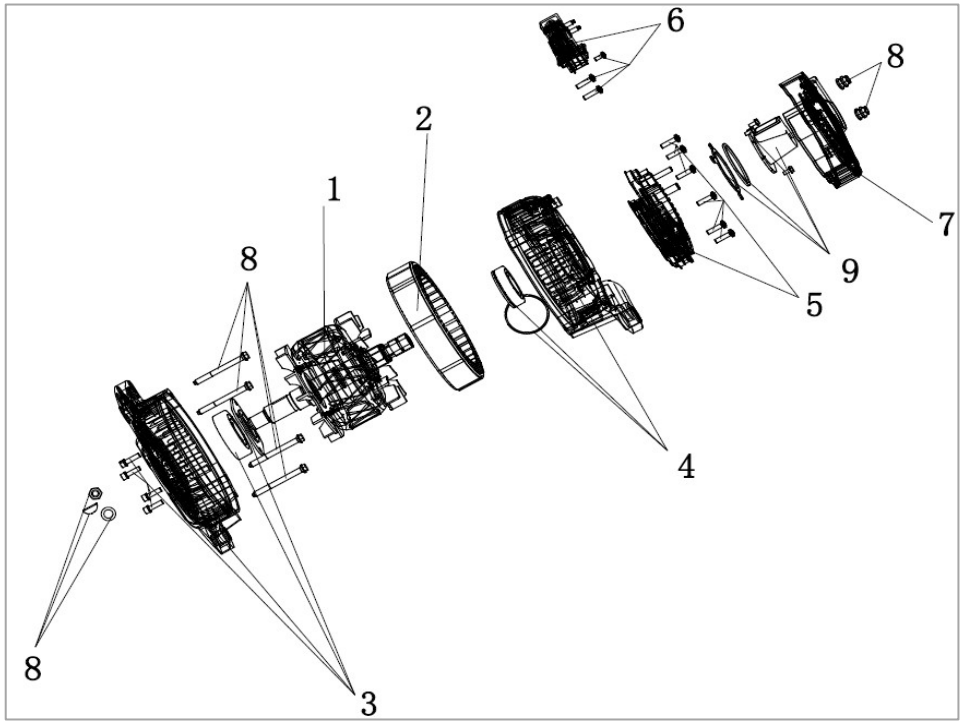

Important: The information contained in this bulletin is intended for use by trained, professional technicians who have the proper tools, equipment, and training to perform the required maintenance described above. This information is NOT intended for 'do-it-yourselfers', and you should not assume that this information applies to your equipment. If you have any questions regarding this information please visit our website at www.prestolite.com, or contact our technical service department at:

Leece-Neville Heavy Duty Systems
400 Main Street
Arcade, NY 14009

Phone/Fax: (866) 288-9853
webmail@prestolite.com

Leece·Neville

Prestolite electric

NUEVO PRODUCTO

Alternador AVi168W

28V 150A
Compacto (ventiladores internos)

- Nuevo, no reacondicionado
- Calidad de equipo original

Para mayor información, visite www.mundopiezas.com.ar

- Diseñado para sistemas de aire acondicionado.
- Battery-less: dedicado exclusivamente al equipo de aire, independiente del Alternador del chasis.
- Gran rango de temperatura de funcionamiento: 125°c.
- La mejor relación peso/potencia del mercado.
- Rodamientos de servicio pesado.

Gran potencia a bajas rpm

- Los sistemas battery-less requieren la instalación de un capacitor como protección de sobre tensión y picos de tensión.
- Recomendamos nuestra Caja de Capacitores **DR-03** específicamente desarrollada para nuestros Alternadores AVi168W.

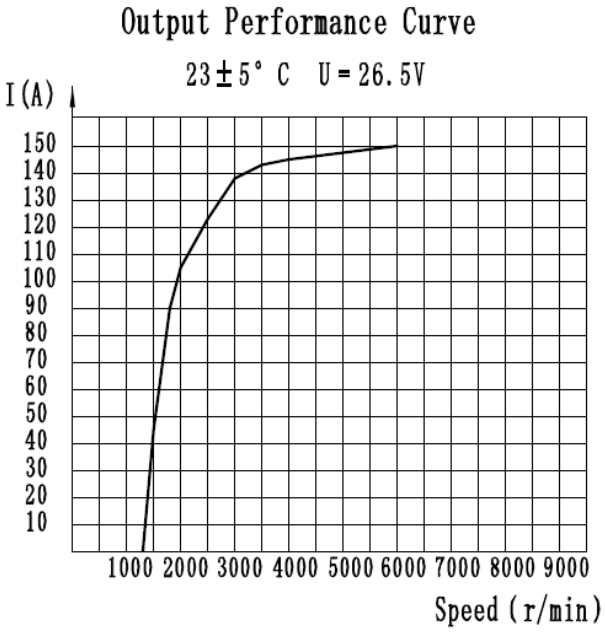

Disponible versión bi-dir

Código	Código de Ventas	Rotación
AVi168W	AVi168W	Horaria
AVi168W3171	A168W171	Bi-direccional

NUEVO PRODUCTO

Dimensiones principales

(La polea se muestra como referencia, el alternador se suministra sin polea).

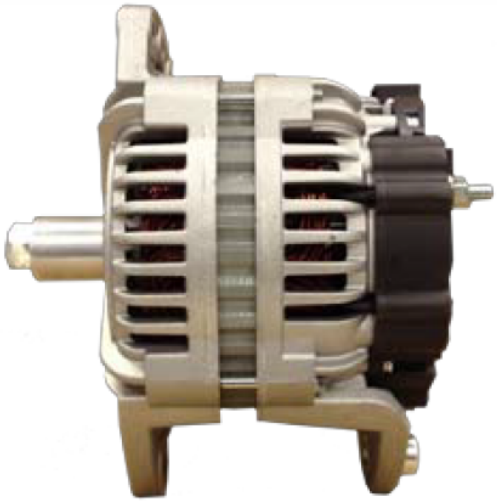

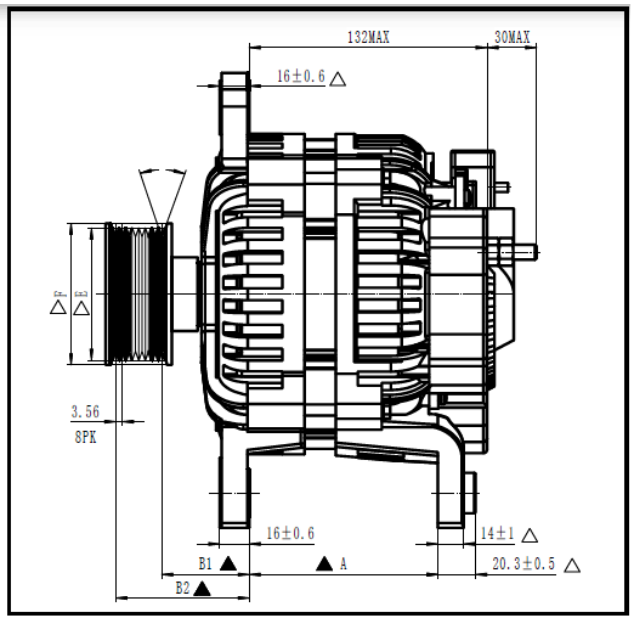

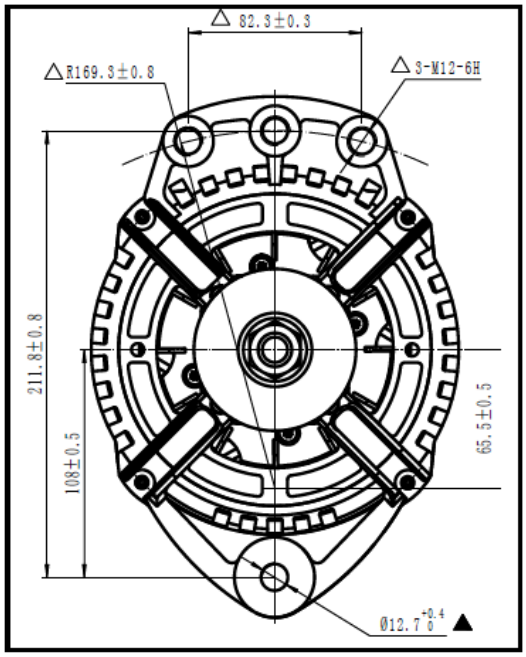

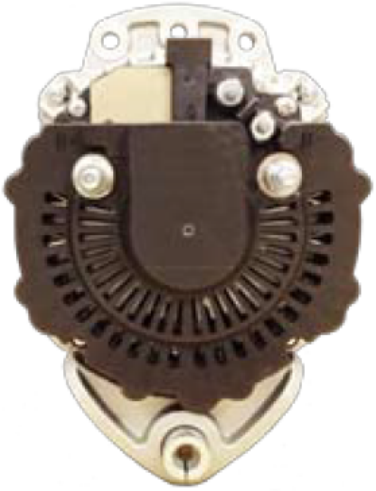

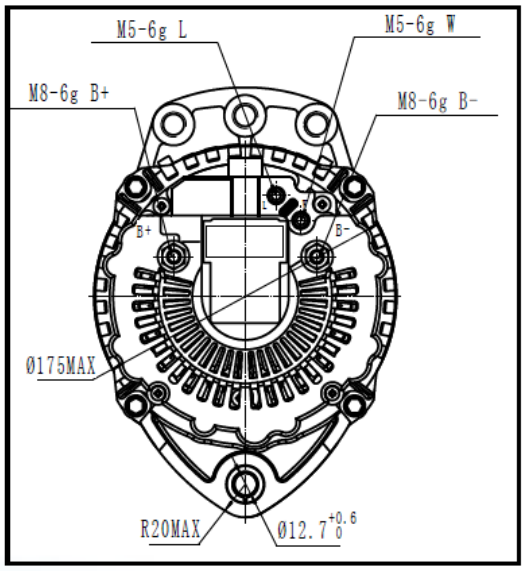

NUEVO PRODUCTO

No más alternadores gemelos

Tradicionalmente el alternador del equipo de aire acondicionado debe ser idéntico al del chasis para no producir problemas de desbalanceo eléctrico y fallas.

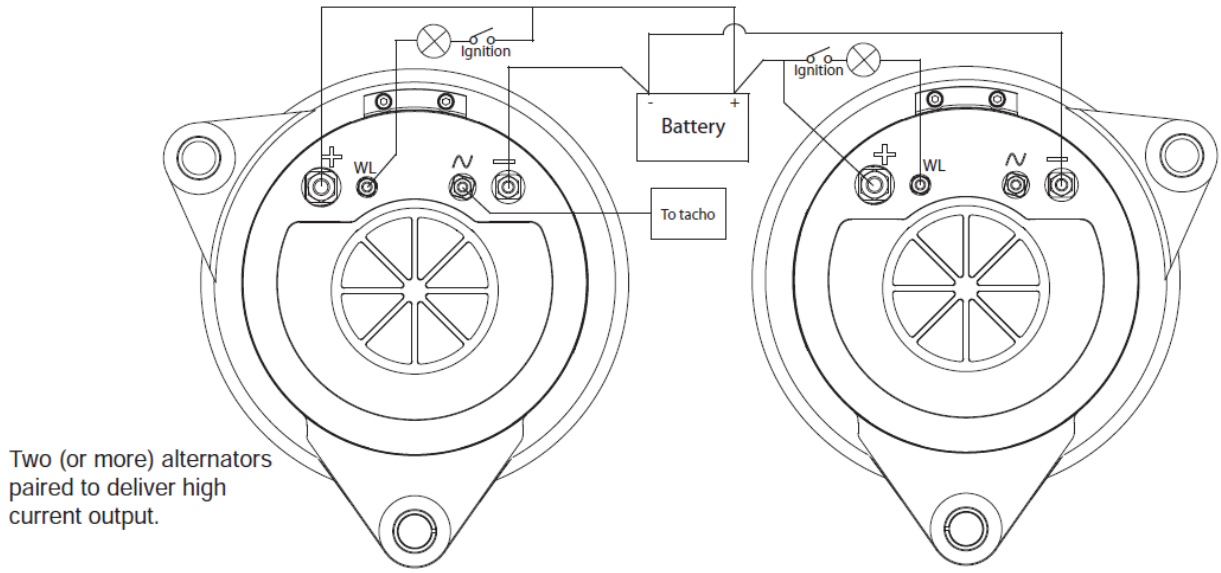

Two (or more) alternators paired to deliver high current output.

La configuración battery-less independiza el alternador del equipo de aire acondicionado. Estandarización.

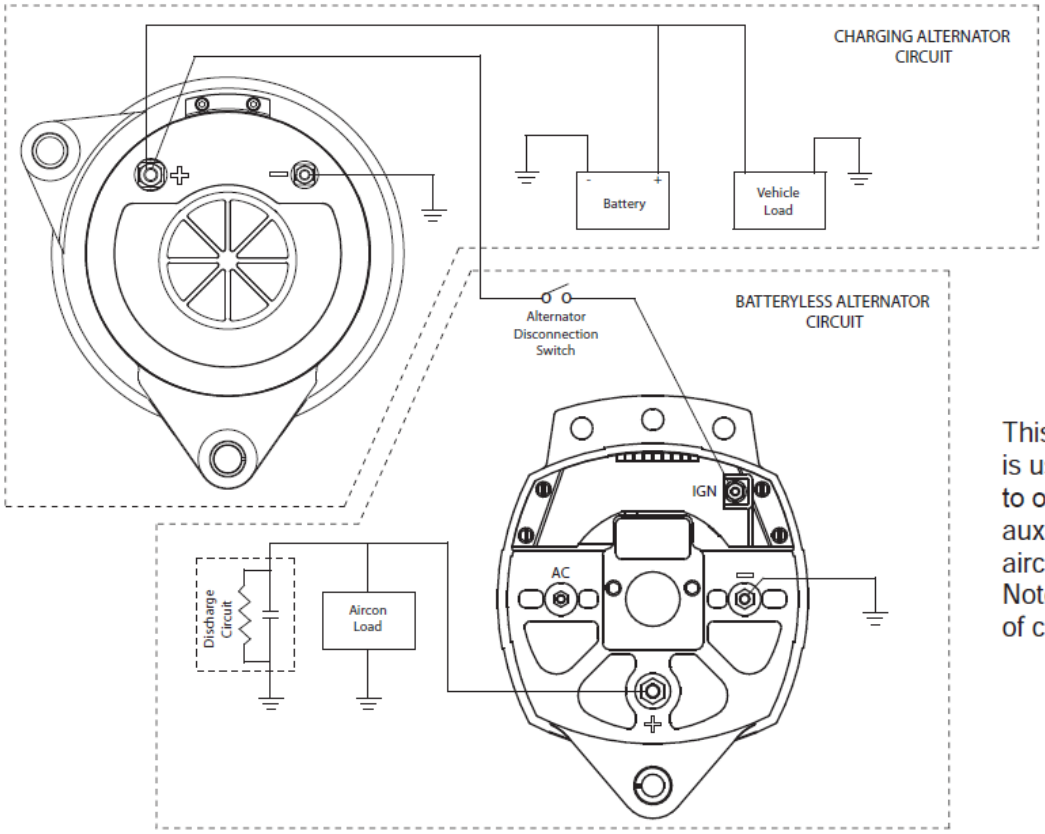

This type of alternator is used to supply power to operate fixed load auxiliary systems, eg. airconditioning.
Note: Not for use as part of charging system .